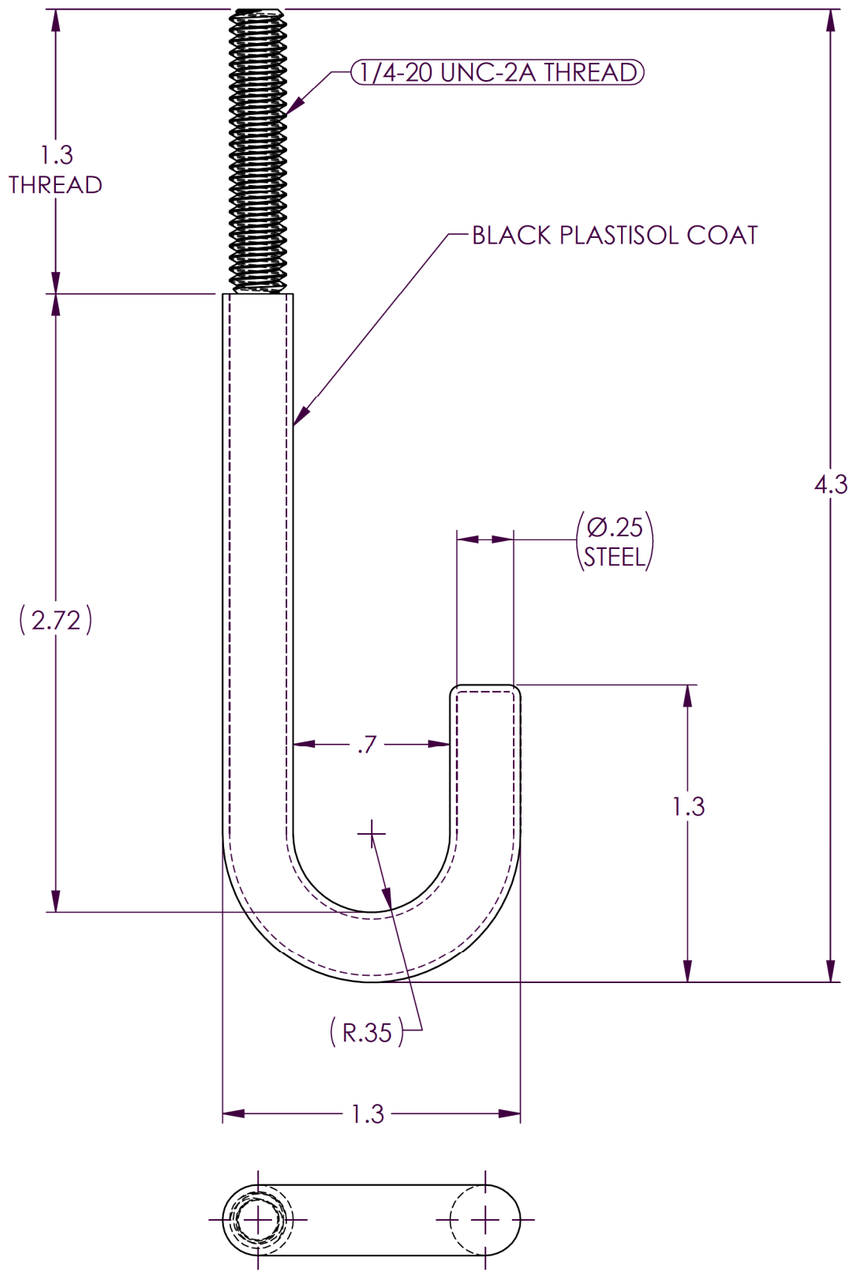

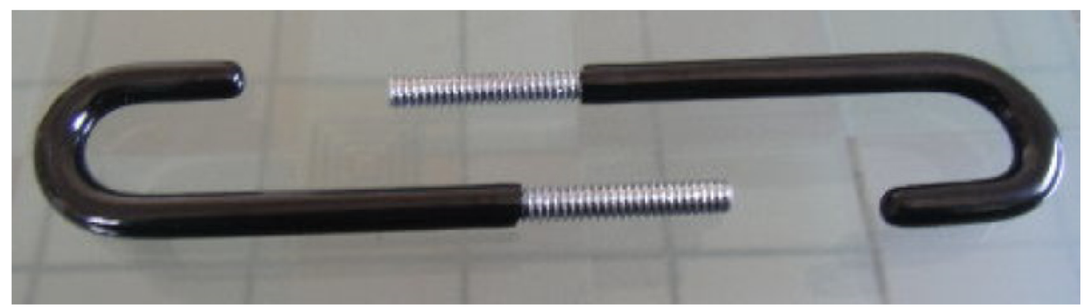

REV.	BY	DATE	ECN NO.	DESCRIPTION
B	GHB	20-FEB-2018	ECN18-021	REMOVE DS20018 E-COAT FROM SYTELINE BOM
A	MFH	14-AUG-2015	ER918	RELEASE FOR PRODUCTION

REVISIONS

= DENOTES CRITICAL FEATURES
TOLERANCE UNLESS SPECIFIED
(COM. STK. SIZES EXCLUDED)
FRAC. = ± 1/32
DEC. .X = ±.1
.XX = ±.01
.XXX = ±.005
ANG. = ±1.0°

MATERIAL: STEEL			FINISH: SEE ABOVE
DR BY: MFH	DATE: 1-MAY-2015	SHEET: 1 OF 1	NAME: J-BOLT,1/4-20
CHK BY: GB	DATE: 14-AUG-2015	SCALE: 1:4	
APP'D BY: CN	DATE: 14-AUG-2015	CALC. WT.	SIZE: B · DO NOT SCALE DRAWING · NUMBER: 2102829 · REV: B